Dylan Thornburg & Ben Serdy

SANTA CLARA UNIVERSITY	ELEN 115 Spring 2024	Dr. S. Krishnan
Laboratory #6: Bipolar Transistor Basics		

I. OBJECTIVES

• To perform a "paper-and-pencil" DC analysis of a single-stage BJT amplifier. •
To study the i-v characteristics of a BJT
• To identify the controlling junction and currents for the amplifier
• To study biasing methods for amplifiers

II. LAB PROCEDURE

Part 1: IV curve of a BJT

1) Draw the schematic in Figure 1. Pick the BJT labeled npn from the component library. Connect a **DC** voltage source from collector to ground and call it VCE. Connect a **DC** voltage source from base to ground and call it VBE.
2) Set up a DC simulation that is a nested sweep. The statement is shown below.

.dc VCE 0 5 0.1 VBE 0 1 0.1

FIGURE 1:

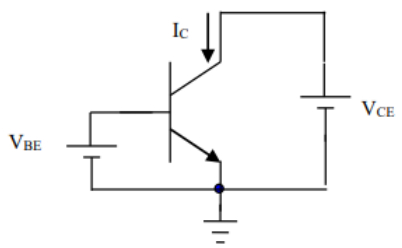

3) Run the simulation and plot the collector current I_C vs. VCE for various VBE. V+

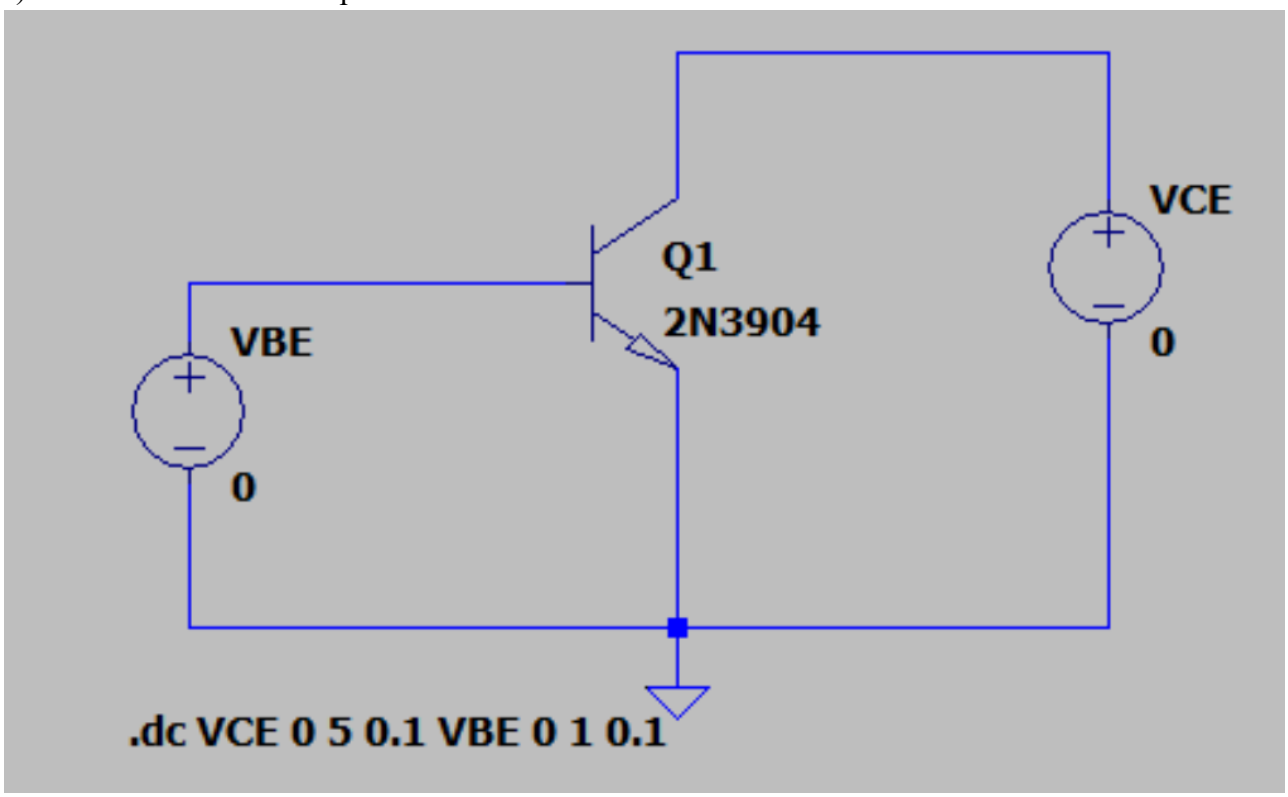

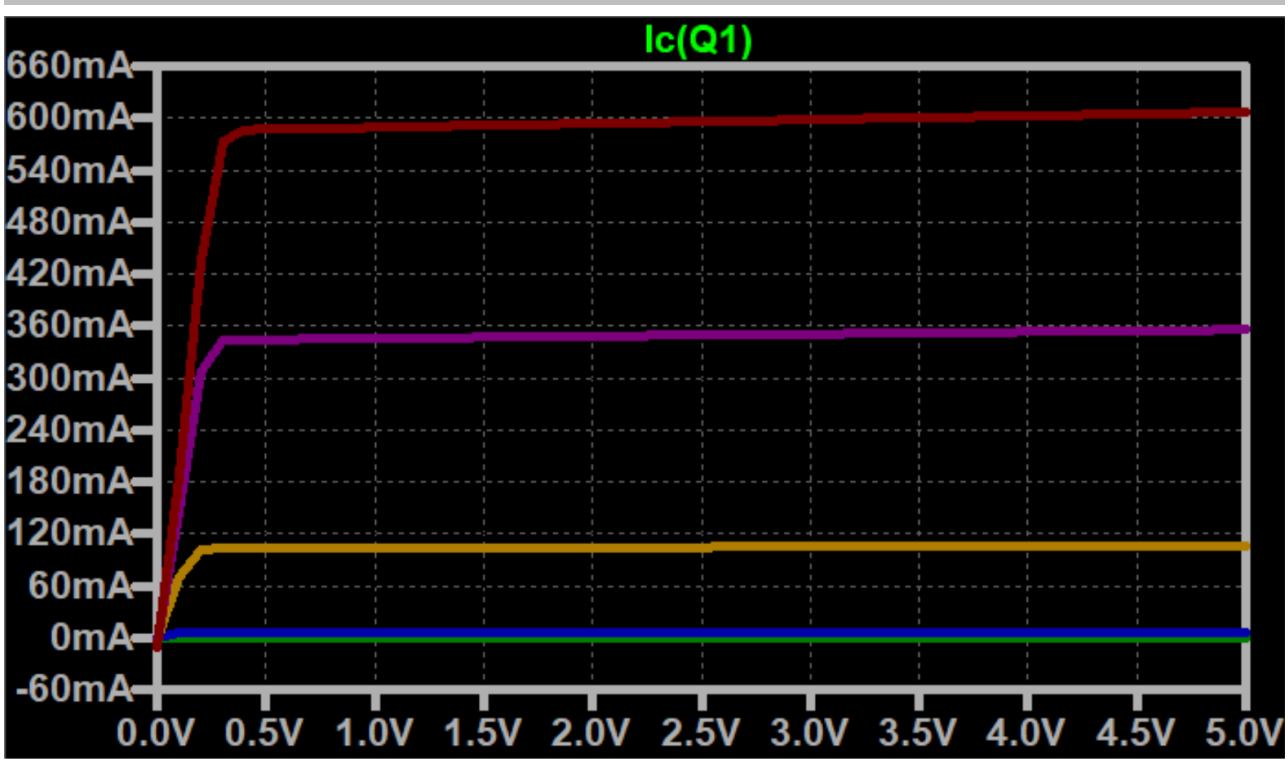

4) Note the three regions of operation of the BJT – cutoff, saturation and active

The cutoff is when the current is around 0, or at and below the blue line. For the other three lines, the saturation region is when they are increasing linearly and their active regions are when current is constant.

Part 2: BJT DC Biasing

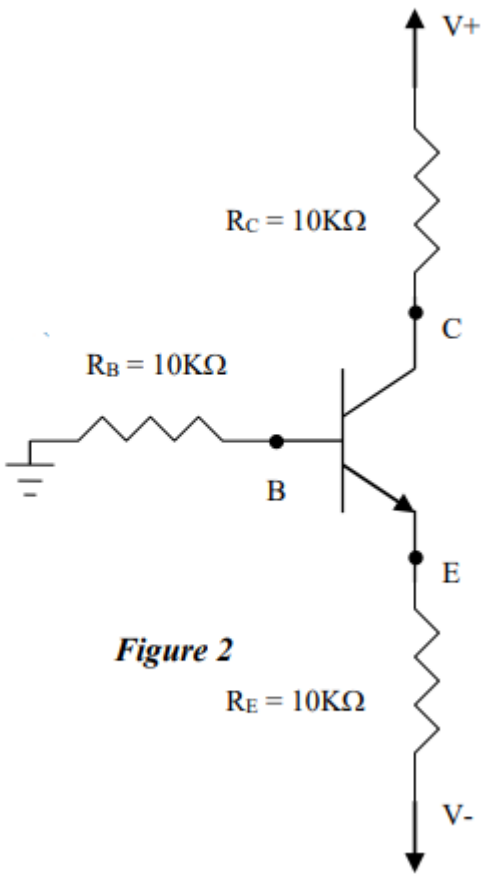

Figure 2

1) Construct the circuit of Figure 2 using DC supplies ±12V. Use the 2N3904 npn transitor.

2) Run a DC operating point simulation.

3) Measure the voltages VB, VC, VE and VBE. Make sure you record the values in Volts to the third decimal place. Tabulate the values in Table 1.

4) Measure the currents IB, IC and IE for the circuit. Make sure you record the values to the third decimal place. Tabulate the values in Table 1.

5) From your measurements, calculate β. Tabulate the values in Table 1.

Table 1									
V+ (V)	V- (V)	V_B (V)	V_C (V)	V_E (V)	V_{BE} (V)	I_B (A)	I_C (A)	I_E (A)	β

+12	-12	-0.037	0.733	-0.696	6.59e-01	-3.73e-6	-0.0011267	-0.00113044	300.268
+12	-5	-0.014	7.659	-0.645	6.32e-01	-1.345e-6	-0.000434	-0.000435	322.677
+5	-5	-0.0143776	0.662197	-0.647819	6.33e-01	-1.43776e-06	-0.00043378	-0.000435218	301.705

6) From the datasheet of the 2N3904 find the transistor parameters and compare them with your numbers from Table 1. The specific ones are V_{BE} and h_{FE} which we know as β.
hFE is 300 which is around our answers. This is ok as the value is not significantly (+50) over what's expected. VBE(sat) is 6.5V and there was no place to find VBE when the bjt is active. Regardless, this makes sense as our VBE's in the active region were around the VBE(sat).

$V_{BE(sat)}$	0.65 –

DC Current Gain (Note 2) (I_C = 0.1 mAdc, V_{CE} = 1.0 Vdc) (I_C = 1.0 mAdc, V_{CE} = 1.0 Vdc) (I_C = 10 mAdc, V_{CE} = 1.0 Vdc) (I_C = 50 mAdc, V_{CE} = 1.0 Vdc) (I_C = 100 mAdc, V_{CE} = 1.0 Vdc)	2N3903 2N3904 2N3903 2N3904 2N3903 2N3904 2N3903 2N3904 2N3903 2N3904	h_{FE}	20 40 35 70 50 100 30 60 15 30	 150 300 – – – –	–
Collector–Emitter Saturation Voltage (Note 2) (I_C = 10 mAdc, I_B = 1.0 mAdc) (I_C = 50 mAdc, I_B = 5.0 mAdc		$V_{CE(sat)}$	– –	0.2 0.3	Vdc
Base–Emitter Saturation Voltage (Note 2) (I_C = 10 mAdc, I_B = 1.0 mAdc) (I_C = 50 mAdc, I_B = 5.0 mAdc)		$V_{BE(sat)}$	0.65 –	0.85 0.95	Vdc

7) Identify the controlling junction of the npn transistor by the below steps.
a) Raise V- to -5V. Redo the measurements and calculations and tabulate them.
b) Keeping V- at -5V, lower V+ to +5V. Redo the measurements and calculations and tabulate them.
c) From the three rows of measurements in Table 1 which junction do you conclude is the controlling one of the two junctions of the BJT? Explain your answer.

The VBE seems to be controlling junction of the transistor. We can see this because there is a change in all the currents when we switch the base voltage to be -5 from -12, we can see a

large change in the current values that does not change when the V+ or VCE changes.

Part 3: BJT DC Biasing methods

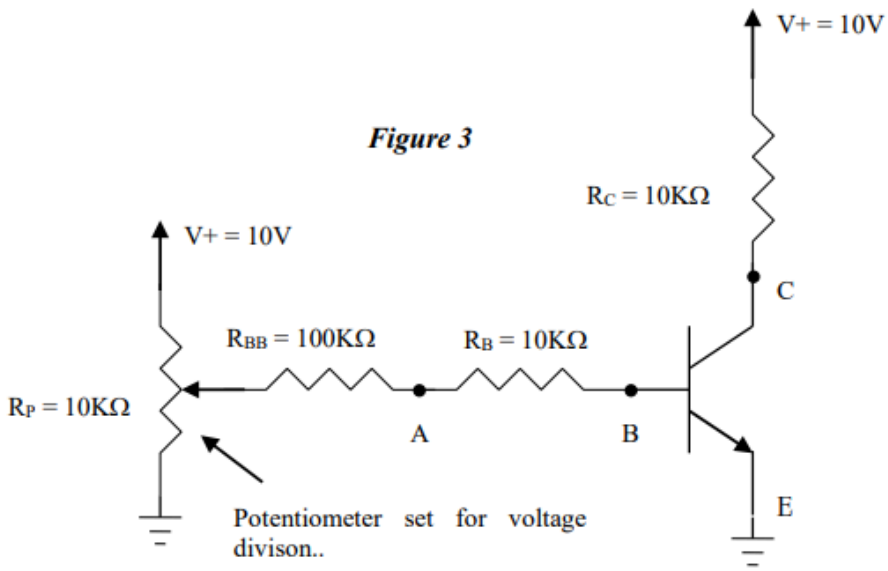

Figure 3

1) Construct the single stage amplifier shown in Figure 3.

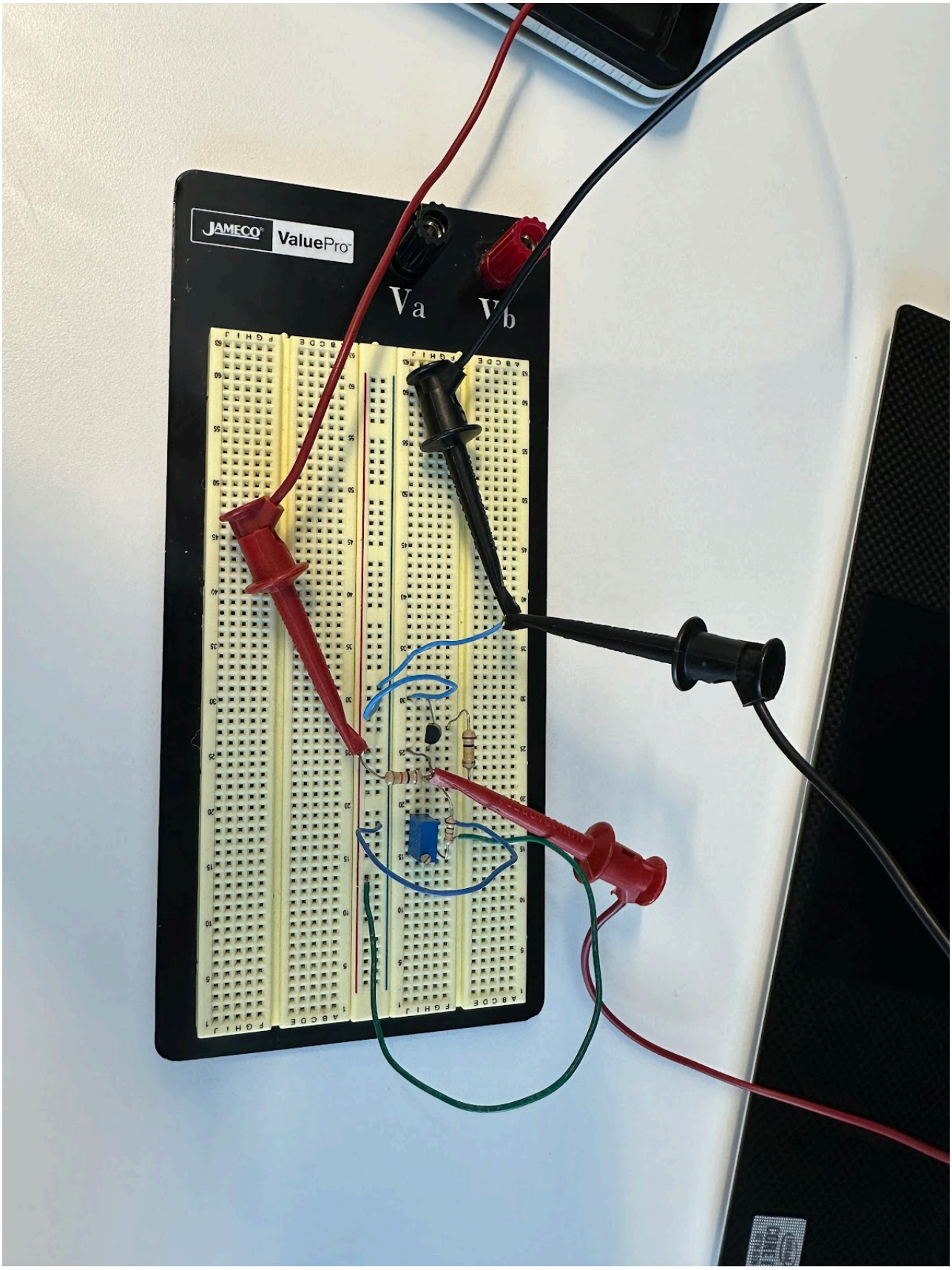
JAMECO
ValuePro
Va
Vb

2) Monitor the voltage at the collector, adjusting the 10KΩ potentiometer until the collector voltage is $V_C = +5V$. This can be done by sweeping the Rx value and finding the Rx value that yields $V_C = 5V$.
3) Record the voltages at the collector, base and emitter.

Vc	Vb	Ve
5.028V	.647	About 0 (.02 mV)

4) Vary the temperature by blowing on the transistor using a heatgun.
5) Does V_C vary for this circuit? By how much?
The heatgun Vc was around 3.555V. This is a voltage decrease of 1.473 V.

6) Now add a resistor $R_E = 1K\Omega$ from the emitter to ground. This biasing method is called emitter degeneration.
7) Repeat steps (2) through (5).

Vc	Vb	Ve
5.0087V	1.14623V	.51263V

8) Does V_C vary for this circuit? By how much?

Yes Vc does vary but not by a lot. It went from 5.0028 to 4.511 which is a difference of .4918V.

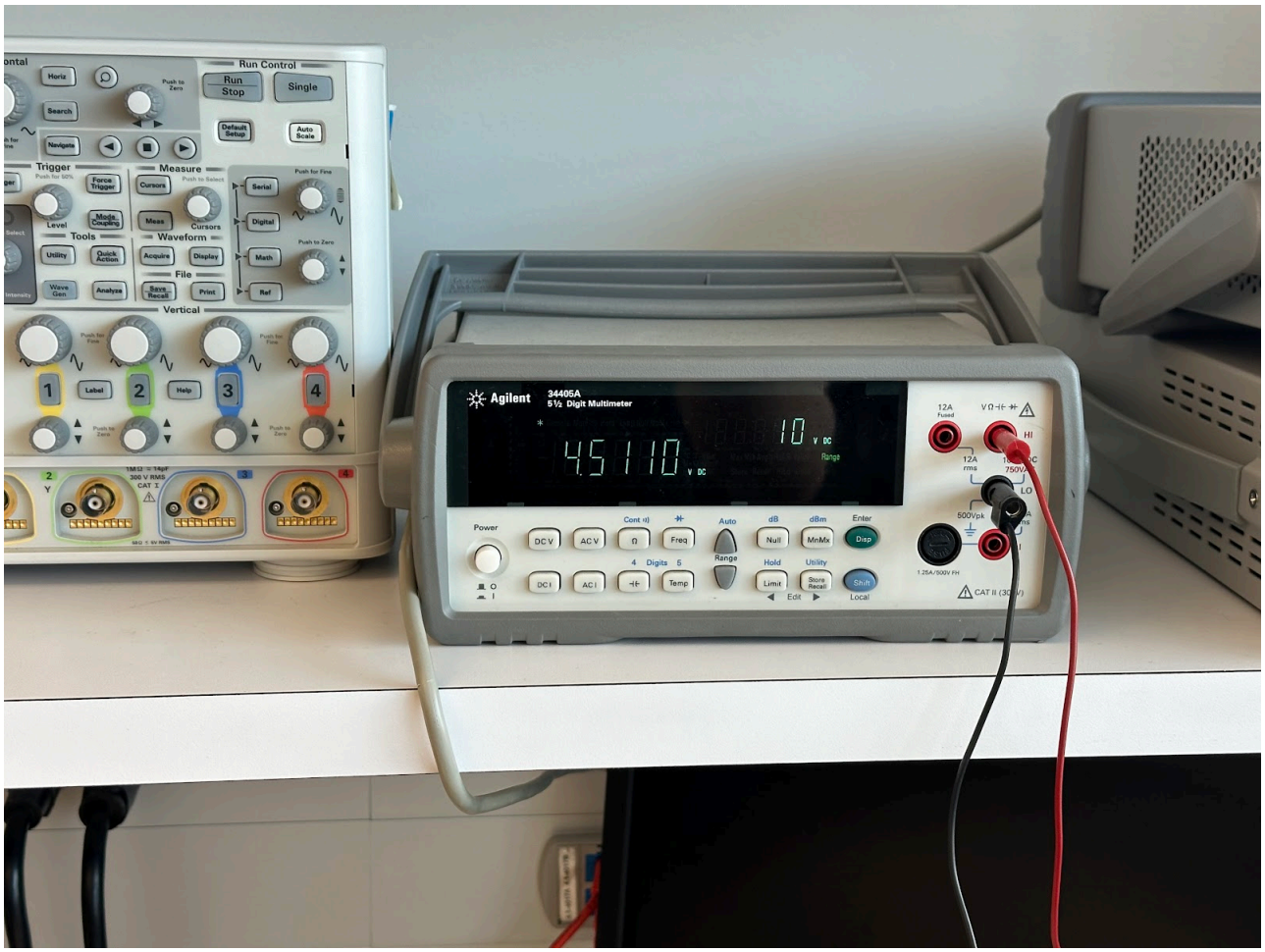

9) What do you notice about how V_C changes between the two biasing schemes for the temperature change.

With the emitter degeneration biasing method, Vc changed much less. A .4918V decrease is almost exactly ⅓ of the first decrease which was 1.473V.

10)From your observations, does the emitter degeneration provide a more stable bias point with respect to temperature variations?

Yes from our observations, emitter degeneration provides a more stable bias point with respect to temperature variations.